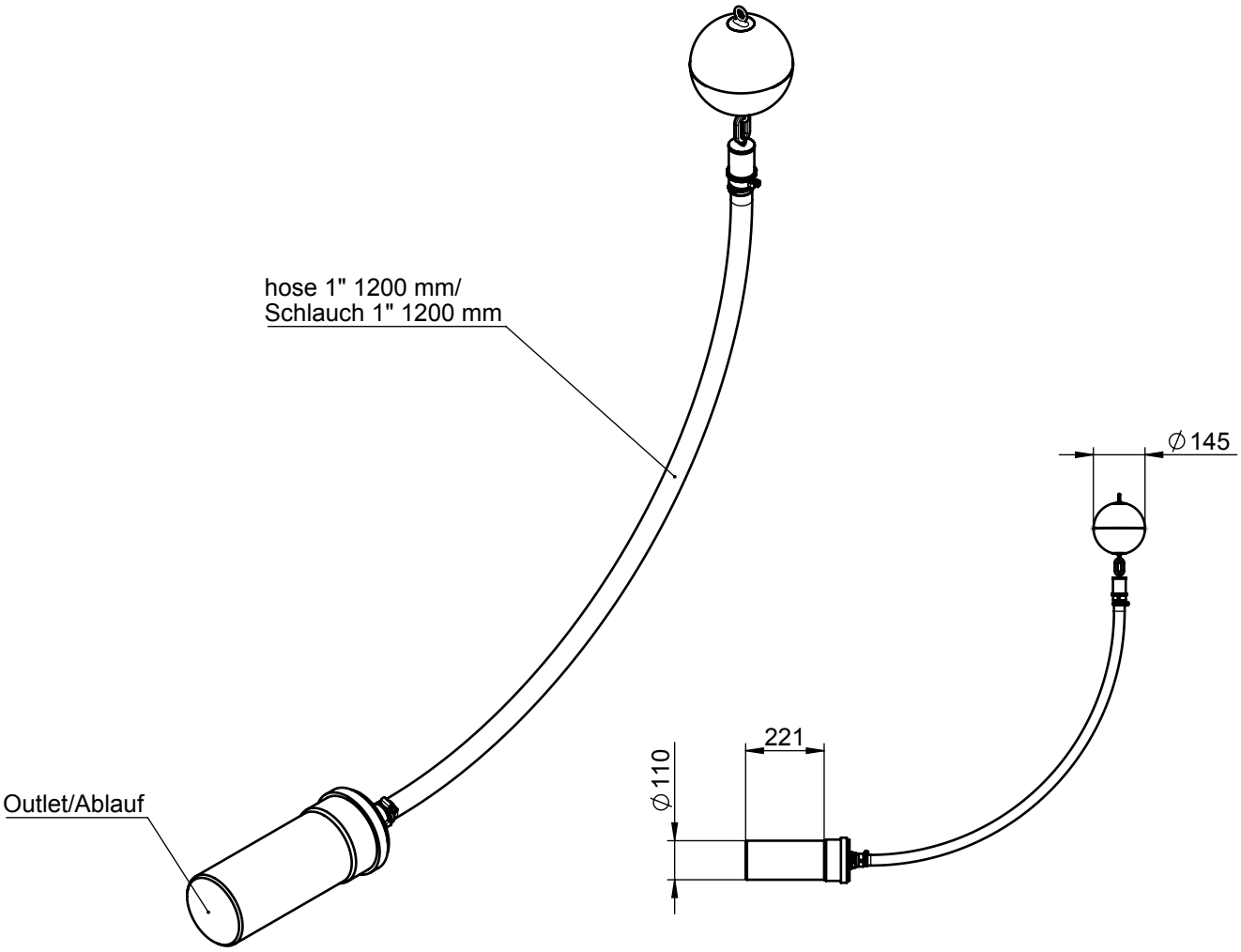

The flow rate can be chosen between 0,05 and 0,35 litres per second/
Drosselleistung kann angepasst werden (von 0,05 - 0,35 l/sec)..

Weight/Gewicht - 1.5 kg

local article number: 103217

ACO Hochbau
Vertrieb GmbH
24755 Rendsburg, Postfach 320
Tel. +49 4331 354-410
Fax. +49 4331 354-360
www.aco-hochbau.de

technical reference:	drawing-no.:	index:	documenttype:
Bartsch, Martin	**1035365-M**	**001**	marketing drw.
created by: mbartsch	reviewed by: mbartsch	projection:ISO-E	scale: 1:20

title:

ACO Rain4me
Flow regulator GRD-10
Retentionsdrossel GRD-10

serial-released

The reproduction, distribution and utilization of this document as well as the communication of its contents to others without express authorization is prohibited. Offenders will be held liable for the payment of damages. All rights reserved in the event of the grant of a patent, utility model or design. Observe copyright by ISO 16016

release date: 2017-04-20 10:28

sheet: 1/1

Solidworks 2014 - DIN A4 - Version 1.4